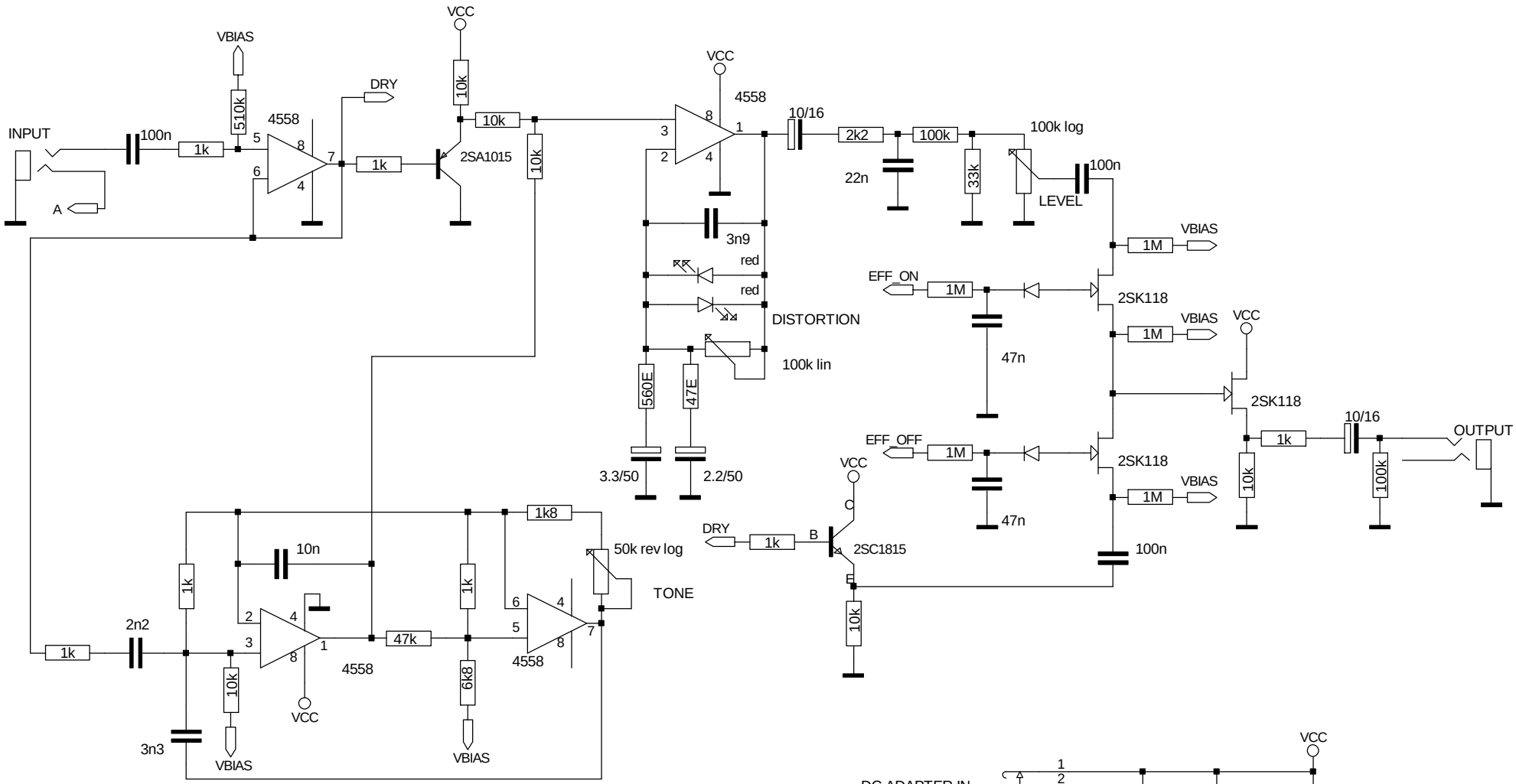

Dirk_Hendrik

REV: P	DATE: 10 MARCH 2006	ENG: DIRK_HENDRIK
PROJECT: IBANEZ CYBERDRIVE		
COMPANY: ADDRESS: CITY AMSTERDAM COUNTRY: HOLLAND		
INITIAL 10 MARCH 2006	PAGE: 1	OF: 1

THIS SCHEMATIC IS A STANDARD ONE AND IS SUBJECT TO CHANGE WITHOUT PRIOR NOTICE
ALL RESISTORS 0.25 WATTS. ALL CAPACITORS ARE IN UF UNLESS OTHERWISE NOTED
ALL DIODES ARE SILICON AND OF THE 1N4148 TYPE UNLESS OTHERWISE NOTED

PDF created with pdfFactory Pro trial version www.pdffactory.com